A Physics-Informed and Score-Based Diffusion Approach for Enhanced AC OPF Solutions

Bozhen Jiang, and Qin Wang, *Senior Member, IEEE*

***Abstract*—The AC optimal power flow (AC-OPF) problem is fundamental to ensuring the economic and secure operation of power systems. Recently, end-to-end artificial neural networks (ANNs) have emerged as a promising tool for solving the AC-OPF problem. By directly mapping load inputs to optimal generation profiles, these models can generate solutions in milliseconds. However, despite this significant computational speed, these methods often struggle to achieve the high level of precision required for practical applications. To address this issue, this article proposes a physics-informed denoising diffusion probabilistic model (PIDDPM) for AC-OPF. By decomposing the solution process into multiple steps and iteratively refining the solution toward the optimum, PIDDPM achieves improved solution accuracy while requiring only a modest increase in computational time. Results on the IEEE 118-bus system demonstrate the feasibility of the proposed method, with PIDDPM achieving improved performance compared to the state-of-the-art physics-informed based methods while producing solutions within the time scale of seconds. Our code is available at https://github.com/BozhenJIANG/PIDDPM-for-ACOPF.**

***Index Terms*—AC optimal power flow, score matching function, diffusion model, physics-informed neural network.**

I. Introduction

ALTERNATING current optimal power flow (AC-OPF) problem plays a crucial role in the economic and safe operation of power systems. Traditionally, AC-OPF problems are solved using nonlinear optimization solver like the Interior Point Optimizer. Although the conventional methods are reliable, they usually require substantial computational costs, especially for large systems.

In recent years, end-to-end AC-OPF solving methods based on artificial neural networks (ANNs) have attracted significant research interest [1]. These approaches learn the mapping from load profiles to AC-OPF solutions and, once adequately trained, can rapidly and directly produce optimized AC-OPF results under given load conditions within milliseconds [2]. To enhance the generalizability and physical consistency of these methods, studies such as [3], [4] have further incorporated physical laws and operational constraints directly into the learning process. Although these methods can solve AC-OPF rapidly, they often fail to provide the level of accuracy required for practical applications.

In intra-day rolling dispatch, many electricity markets use a 5-minute decision cycle (15 minutes in some regions) and perform rolling optimization for operational plans. This observation motivates our work: can a modest increase in computation time—from milliseconds to seconds—yield AC-OPF solutions that are more accurate and reliable?

Therefore, we propose a physics-informed denoising diffusion probabilistic model (PIDDPM) for AC-OPF, which achieves improved solution accuracy with a modest and acceptable increase in computational time. The main contributions of this work are fourfold. First, we propose a multi-step framework for solving AC-OPF that combines a multi-step noise prediction network with an AC power flow (AC-PF) evaluation network. Second, we introduce a physics-informed denoising loss that jointly incorporates generation cost, equality constraints, and inequality constraints. Third, we develop an accelerated sampling strategy that limits solution time to the order of seconds. Fourth, we provide a convergence analysis of the proposed method.

The remainder of this paper is organized as follows. Section II presents the AC-OPF problem. Section III presents the proposed PIDDPM framework. Section IV presents and discusses testing results that validate PIDDPM's effectiveness. Finally, Section V concludes.

II. Problem Statement

The AC-OPF is mathematically formulated as a nonlinear optimization problem. It aims to minimize the total generation cost $\min \sum_{i\in\mathcal{G}} C_i(P_{Gi})$ while satisfying the physical laws of the power grid and operational security constraints, which are defined as follows [1]:

$$\begin{aligned}
&P_{Gi} - P_{Di} = V_i \sum_{j\in\mathcal{N}} V_j(G_{ij}\cos\theta_{ij} + B_{ij}\sin\theta_{ij}), \forall i \in \mathcal{N} \\
&Q_{Gi} - Q_{Di} = V_i \sum_{j\in\mathcal{N}} V_j(G_{ij}\sin\theta_{ij} - B_{ij}\cos\theta_{ij}), \forall i \in \mathcal{N} \\
&P_{Gi}^{\min} \le P_{Gi} \le P_{Gi}^{\max}, \quad Q_{Gi}^{\min} \le Q_{Gi} \le Q_{Gi}^{\max}, \forall i \in \mathcal{G} \\
&V_i^{\min} \le V_i \le V_i^{\max}, \forall i \in \mathcal{N}, \quad |S_{ij}| \le S_{ij}^{\max}, \forall (i,j) \in \mathcal{L}
\end{aligned} \tag{1}$$

where $C_i(\cdot)$ is the cost function of generator i, P_{Gi} and Q_{Gi} represent the active and reactive power of generators, P_{Di} and Q_{Di} denote the active and reactive load, V_i and θ_i are the voltage magnitude and phase angle at bus i, and G_{ij} and B_{ij} are the elements of the admittance matrix [1]. The sets $\mathcal{N}$, $\mathcal{G}$, and $\mathcal{L}$ refer to the collections of all buses, generators, and branches, respectively. Classical AC-OPF solvers iteratively update the kth candidate solution $\mathbf{x}^{(k)}$ along a search direction $\mathbf{d}^{(k)}$ derived from the Lagrangian $\mathcal{L}(\mathbf{x}, \boldsymbol{\lambda}, \boldsymbol{\nu})$, progressing from an initial guess toward a local optimum that satisfies the KKT conditions, with Lagrange multipliers $\boldsymbol{\lambda}$ and $\boldsymbol{\mu}$ enforcing equality and inequality constraints, respectively. In this work, we seek to enable the ANN to learn the probabilistic direction field at each step, thereby improving the accuracy of ANN-based AC-OPF solutions.

III. Physics-informed Denoising Diffusion Framework for AC-OPF Problem

A. Denoising Diffusion Probabilistic Models

The DDPM includes two process: the noisy process and the denoise process. The noisy process gradually adds Gaussian noise over T steps to a known AC-OPF optimal solution $\mathbf{x}_0$ from the true data distribution $p_{\text{data}}(\mathbf{x}_0)$, producing a sequence of latent variables $\{\mathbf{x}_1, \mathbf{x}_2, \ldots, \mathbf{x}_T\}$ with increasing noise levels. The transition probability at each step is given by [5]: $q(\mathbf{x}_t|\mathbf{x}_{t-1}) =$

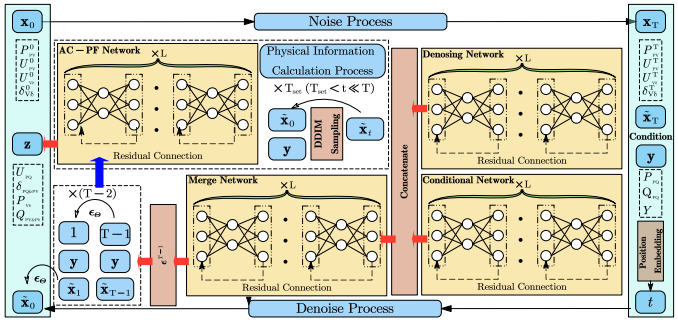

Fig. 1. The Detailed Model Structure.

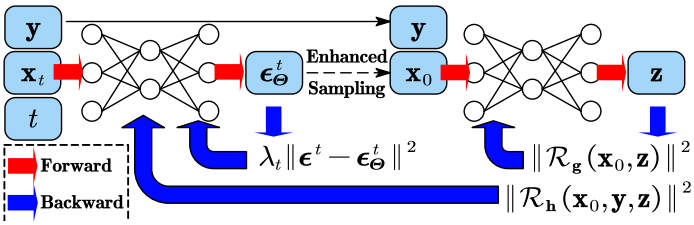

Fig. 2. Overall Process.

$\mathcal{N}(\mathbf{x}_t; \sqrt{1-\beta_t}\mathbf{x}_{t-1}, \beta_t \mathbf{I})$, where $\{\beta_t \in (0,1)\}_{t=1}^{T}$ is a predefined noise variance schedule. A key property is that when T is sufficiently large, the distribution of $\mathbf{x}_T$ approximates an isotropic Gaussian distribution $p(\mathbf{x}_T) \approx \mathcal{N}(\mathbf{0}, \mathbf{I})$. This process constructs a degradation path from the complex, unknown feasible solution distribution $p_{\text{data}}(\mathbf{x}_0)$ to a simple, known prior distribution $p(\mathbf{x}_T)$. A crucial advantage is that for a given $\mathbf{x}_0$, a noisy sample $\mathbf{x}_t$ at any time step t can be sampled [5]:

$$\mathbf{x}_t = \sqrt{\bar{\alpha}_t}\mathbf{x}_0 + \sqrt{1-\bar{\alpha}_t}\boldsymbol{\epsilon}, \quad \boldsymbol{\epsilon} \sim \mathcal{N}(\mathbf{0}, \mathbf{I}) \tag{2}$$

where $\alpha_t = 1 - \beta_t$ and $\bar{\alpha}_t = \prod_{s=1}^{t} \alpha_s$. Then, the denoise process's goal is to start from Gaussian prior noise $\mathbf{x}_T \sim \mathcal{N}(\mathbf{0}, \mathbf{I})$ and gradually reconstruct the AC-OPF optimal solution $\mathbf{x}_0$ through a denoising process parameterized by an ANN $\boldsymbol{\epsilon}_{\boldsymbol{\Theta}}$. This process is a reverse Markov chain from $t = T$ to $t = 1$, and its reverse transition probability is approximated by [5]: $p_\theta(\mathbf{x}_{t-1}|\mathbf{x}_t) = \mathcal{N}(\mathbf{x}_{t-1}; \boldsymbol{\epsilon}_{\boldsymbol{\Theta}}(\mathbf{x}_t, t), \sigma_t^2 \mathbf{I})$. It means $\mathbf{x}_{t-1}$ is computed from the predicted noise:

$$\mathbf{x}_{t-1} = \frac{1}{\sqrt{\alpha_t}}\left(\mathbf{x}_t - \frac{1-\alpha_t}{\sqrt{1-\bar{\alpha}_t}}\boldsymbol{\epsilon}_{\boldsymbol{\Theta}}(\mathbf{x}_t, t)\right) + \sigma_t \boldsymbol{\epsilon}, \quad \boldsymbol{\epsilon} \sim \mathcal{N}(\mathbf{0}, \mathbf{I}). \tag{3}$$

Intuitively, this denoise process is very similar to the process for classical AC-OPF solvers in Section II. The DDPM is trained using a simplified objective [5]: a noise-prediction network $\boldsymbol{\epsilon}_{\boldsymbol{\Theta}}(\mathbf{x}_t, t)$ learns to predict the noise $\boldsymbol{\epsilon}$ added during the forward process via mean squared error $L_{\text{DDPM}}(\boldsymbol{\Theta}) = \mathbb{E}_{t,\mathbf{x}_0,\boldsymbol{\epsilon}}\left[\left\|\boldsymbol{\epsilon} - \boldsymbol{\epsilon}_{\boldsymbol{\Theta}}\left(\sqrt{\bar{\alpha}_t}\,\mathbf{x}_0 + \sqrt{1-\bar{\alpha}_t}\,\boldsymbol{\epsilon},\, t\right)\right\|^2\right]$.

B. The Sequential Architecture Design

Let $\mathbf{h}(\mathbf{x}_0, \mathbf{y}, \mathbf{z})$ denote the AC-PF equality constraints in (1), where $\mathbf{x}_0$ represents the AC-OPF solution, $\mathbf{y}$ includes the load demands and the network admittance matrix, and $\mathbf{z}$ represents the remaining variables derived from the AC-PF calculation. Because there is no gradient flow between the constraints $\mathbf{h}$ and the distribution $p_{\boldsymbol{\Theta}}(\mathbf{x}_0|\mathbf{y})$, the parameters $\boldsymbol{\Theta}$ cannot be optimized by minimizing the constraint violation $\mathbf{h}$. This limitation extends to the inequality constraints $\mathbf{g}(\mathbf{x}_0, \mathbf{z})$ as well. Consequently, a standalone DDPM cannot guarantee the physical feasibility of the generated AC-OPF solutions. Therefore, we propose a sequential network shown in Fig. 1: a noise prediction network generates ϵ_t from $\{\mathbf{y}, t\}$ to compute $\mathbf{x}_0$ via (3), which is then fed with $\mathbf{y}$ into an AC-PF evaluation network to obtain $\mathbf{z}$ and the residual $\boldsymbol{\mathcal{R}}(\mathbf{x}_0) = \begin{bmatrix} \mathbf{g}(\mathbf{x}_0, \mathbf{z}) \\ \mathbf{h}(\mathbf{x}_0, \mathbf{y}, \mathbf{z}) \end{bmatrix}$. This creates a direct gradient pathway from the physics-informed loss to $\boldsymbol{\Theta}$, enabling loss design and gradient propagation.

C. Physical-Informed Loss Function Design

We adopt an energy-based method (EBM) view to incorporate AC-OPF physics into the diffusion model. Defining the energy function $E(\mathbf{x}_0) = \frac{1}{2\sigma^2}\left\|\boldsymbol{\mathcal{R}}(\mathbf{x}_0)\right\|^2$, which measures how much a sample $\mathbf{x}_0$ violates the physical laws. In an EBM framework, lower energy corresponds to higher probability $p(\mathbf{x}_0) \propto \exp\left(-E(\mathbf{x}_0)\right) = \exp\left(-\frac{1}{2\sigma^2}\|\boldsymbol{\mathcal{R}}(\mathbf{x}_0)\|^2\right)$. Following the prior work [6], we introduce the virtual observation $\hat{\mathbf{r}} = \mathbf{0}$ and assume it is generated from $q_{\boldsymbol{\mathcal{R}}}(\hat{\mathbf{r}} \mid \mathbf{x}_0) = \mathcal{N}\big(\hat{\mathbf{r}}; \boldsymbol{\mathcal{R}}(\mathbf{x}_0), \sigma^2\mathbf{I}\big)$. As $\sigma^2 \to 0$, the probability mass concentrates on $\boldsymbol{\mathcal{R}}(\mathbf{x}_0)$, enforcing the residual equation. The corresponding virtual likelihood is $p_{\boldsymbol{\Theta}}(\hat{\mathbf{r}}) = \int q_{\boldsymbol{\mathcal{R}}}(\hat{\mathbf{r}} \mid \mathbf{x}_0)\, p_{\boldsymbol{\Theta}}(\mathbf{x}_0)\, d\mathbf{x}_0 = \mathbb{E}_{\mathbf{x}_0 \sim p_{\boldsymbol{\Theta}}}[q_{\boldsymbol{\mathcal{R}}}(\hat{\mathbf{r}} \mid \mathbf{x}_0)]$. We maximize the log-likelihood of the virtual observation:

$$\arg\max_{\boldsymbol{\Theta}} \ \mathbb{E}_{\hat{\mathbf{r}}}\left[\log p_{\boldsymbol{\Theta}}(\hat{\mathbf{r}})\right] = \arg\max_{\boldsymbol{\Theta}} \ \mathbb{E}_{\mathbf{x}_0 \sim p_{\boldsymbol{\Theta}}}\left[\log q_{\boldsymbol{\mathcal{R}}}(\hat{\mathbf{r}} = \mathbf{0} \mid \mathbf{x}_0)\right]. \tag{4}$$

Theorem 1. *Let $\boldsymbol{\Theta}$ denote the parameters of the generative model $p_{\boldsymbol{\Theta}}(\mathbf{x}_0)$. If the virtual observation is fixed to $\hat{\mathbf{r}} = \mathbf{0}$ and the observation model is $q_{\boldsymbol{\mathcal{R}}}(\hat{\mathbf{r}} \mid \mathbf{x}_0) = \mathcal{N}\big(\hat{\mathbf{r}}; \boldsymbol{\mathcal{R}}(\mathbf{x}_0), \sigma^2\mathbf{I}\big)$, then maximizing the expected log-likelihood of the virtual observation is equivalent to minimizing the expected squared residual: $\arg\min_{\boldsymbol{\Theta}} \ \mathbb{E}_{\mathbf{x}_0 \sim p_{\boldsymbol{\Theta}}(\mathbf{x}_0)}\left[\frac{1}{2\sigma^2}\left\|\boldsymbol{\mathcal{R}}(\mathbf{x}_0)\right\|^2\right]$. When the generated samples are obtained via the reparameterization in (3), this equivalence implies that updating $\boldsymbol{\Theta}$ to maximize the log-likelihood drives the parameters in a direction that reduces the physical residual $\boldsymbol{\mathcal{R}}(\mathbf{x}_0)$.*

Proof. The proof can be found in [7]. □

Finally, we obtain the PIDDPM training objective :

$$\mathcal{L}_{\text{total}}(\boldsymbol{\Theta}) = \mathbb{E}_{\mathbf{x}_0,t,\boldsymbol{\epsilon}}[\|\boldsymbol{\epsilon} - \boldsymbol{\epsilon}_{\boldsymbol{\Theta}}(\mathbf{x}_t, t)\|^2 + \lambda\|\boldsymbol{\mathcal{R}}(\mathbf{x}_0^*(\mathbf{x}_t))\|^2], \tag{5}$$

where λ is a regularization coefficient and $\mathbf{x}_0^*(\mathbf{x}_t)$ is the approximate clean solution reconstructed from $\mathbf{x}_t$ using an enhanced sampling method described in the next subsection.

D. Enhanced Sampling Strategy

During training, evaluating the physics-informed residual $\boldsymbol{\mathcal{R}}(\mathbf{x}_0)$ requires a clean estimate of $\mathbf{x}_0$ from a noisy state $\mathbf{x}_t$. While a full T-step reverse diffusion process is computationally prohibitive, a simple one-shot reconstruction often lacks the accuracy needed to provide reliable gradients for physics-based loss functions. We therefore adopt an accelerated multi-step sampling strategy. Specifically, starting from the noisy state $\mathbf{x}_t$, we define a subsequence of S time steps $\{\tau_i\}_{i=0}^{S}$, where $\tau_S = T$, $\tau_0 = 0$, and $S \ll T$. For $i = S, S-1, \ldots, 1$, the state is updated deterministically as: $\mathbf{x}_{\tau_{i-1}} = \sqrt{\bar{\alpha}_{\tau_{i-1}}}\left(\frac{\mathbf{x}_{\tau_i} - \sqrt{1-\bar{\alpha}_{\tau_i}}\boldsymbol{\epsilon}_\theta(\mathbf{x}_{\tau_i}, \tau_i)}{\sqrt{\bar{\alpha}_{\tau_i}}}\right) + \sqrt{1-\bar{\alpha}_{\tau_{i-1}}}\boldsymbol{\epsilon}_\theta(\mathbf{x}_{\tau_i}, \tau_i)$. This avoids iterative sampling and improves training efficiency.

TABLE I
COMPREHENSIVE PERFORMANCE COMPARISON.

Methods	l_{cost} (%)	Constraint Violations (10^{-2})				Time/s.
		$\bar{l}_v$	l_p	l_q	l_u	
M1	0.12	1.38	0.07	10.25	0.08	$\leq$ 0.001s
M2	0.07	0.83	0.02	8.46	0.01	$\leq$ 0.001s
PIDDPM	**0.01**	**0.07**	**0.00**	**0.59**	**0.00**	$\leq$ 5s

TABLE II
INFERRING TIMES AND ACCURACY TRADE-OFF.

Inferring Times (T)	Inferring Time	l_{cost} (%)	Constraint Violations (10^{-2})			
			$\bar{l}_v$	l_p	l_q	l_u
100	$\leq$ **0.1s**	**0.01**	**0.03**	**0.00**	**0.30**	**0.00**
30	$\leq$ 0.01s	0.01	0.08	0.00	0.63	0.00
10	$\leq$ 0.01s	0.02	0.32	0.00	2.51	0.00
5	$\leq$ 0.001s	0.08	0.96	0.03	7.37	0.00

Theorem 2. *Assume that training has converged to a local optimum $\boldsymbol{\Theta}^*$ and that the energy function $E(\mathbf{x}) = \frac{1}{2\sigma^2}\|\mathcal{R}(\mathbf{x})\|^2$ is differentiable with a Lipschitz-continuous gradient along the sampling path. Let $\{\mathbf{x}_{\tau_i}\}_{i=0}^{S}$ be the sequence generated by the deterministic update $\mathbf{x}_{\tau_{i-1}} = \sqrt{\bar{\alpha}_{\tau_{i-1}}}\left(\frac{\mathbf{x}_{\tau_i} - \sqrt{1-\bar{\alpha}_{\tau_i}}\,\boldsymbol{\epsilon}_{\boldsymbol{\Theta}^*}(\mathbf{x}_{\tau_i}, \tau_i)}{\sqrt{\bar{\alpha}_{\tau_i}}}\right) + \sqrt{1-\bar{\alpha}_{\tau_{i-1}}}\,\boldsymbol{\epsilon}_{\boldsymbol{\Theta}^*}(\mathbf{x}_{\tau_i}, \tau_i)$, with $\tau_0 = 0$, $\tau_S = T$, and $S \ll T$. Then the energy decreases monotonically along this trajectory, i.e., $E(\mathbf{x}_{\tau_{i-1}}) \leq E(\mathbf{x}_{\tau_i})$ for all $i = 1, \ldots, S$.*

Proof. The proof can be found in [7]. □

E. The Overall Training Process

The training process is shown in Fig. 2. In the forward process, PIDDPM takes a clean solution $\mathbf{x}_0$, condition $\mathbf{y}$, diffusion step t, and noisy state $\mathbf{x}_t$. It outputs predicted noise $\boldsymbol{\varepsilon}_\theta(\mathbf{x}_t, \mathbf{y}, t)$. In the backward process, parameters are updated by minimizing the noise discrepancy in (5). Meanwhile, AC-PF evaluation network calculates AC-PF residuals and inequality constraint violations $\boldsymbol{\mathcal{R}}(\mathbf{x}_0)$ to enforce AC-OPF consistency.

IV. CASE STUDY

A. Data Set

This paper employs PowerModel.jl (PM.jl) [8] to generate AC-OPF data and implements standard 118-bus systems for evaluating PIDDPM. By scaling the loads within these systems at specific ratios like [2], 11,000 sample points are generated. The training set (10,000 points) leverages abundant operational data to pre-train both the PIDDPM-based AC-OPF solver and the AC-PF evaluator networks, ensuring well-initialized weight parameters. The test set (1,000 points) is used for evaluating the method's performance. As the data are already provided in per-unit values, no additional normalization is applied in this study. Several evaluation metrics, used in [4], are considered: (1) the operating cost gap $l_{cost} = \frac{C - C_o}{C_o} \times 100\%$, where C and C_o denote the generation cost given by ANN and PowerModel.jl, respectively; (2) average violation $\bar{l}_v$; (3) individual constraint violations including active power limits l_p, reactive power limits l_q and bus voltage limits l_u.

B. Result Analysis

A comprehensive performance comparison is presented in Table I, incorporating multiple state-of-the-art methods to ensure rigorous assessment. The supervised method [3] (denoted as M1) and the latest PINN-based method [4] (denoted as M2) are taken into comparison. It is worth noting that the PIDDPM results correspond to a diffusion step count of $T = 1000$. The results in Table I demonstrate that the proposed PIDDPM achieves the lowest constraint violations among the learning-based methods where it reduces violations by more than an order of magnitude compared to M2. While the cost obtained by PIDDPM is very close to the PowerModel.jl. This indicates that PIDDPM effectively balances solution accuracy and physical feasibility, validating the benefits of the stepwise physical-informed diffusion approach. With $T = 1000$, the inference time is a bit high but still on the order of seconds. The enhanced sampling strategy, proposed in Section III-D, will be presented to show the inferring time decrease in the following subsection.

C. Inferring Time and Accuracy Trade-off Discussion

To further explore how the number of inference steps affects the performance of PIDDPM, we present a trade-off analysis in Table II. We evaluate the model with fewer inference steps S—ranging from 100 down to 5—to assess the impact on both computational speed and solution accuracy. The results show that reducing the number of steps from 100 to 5 significantly decreases inference time, from under 5 seconds to less than 0.1 seconds. This gain in speed is accompanied by a slight rise in constraint violations, which still performs well than the end-to-end AC-OPF solving methods.

V. CONCLUSION

This article introduces a physics-informed denoising diffusion probabilistic model for solving the AC-OPF problem. Inspired by traditional optimization methods, the proposed approach differs from existing end-to-end AC-OPF solvers by decomposing the solution process into multiple steps and iteratively refining the solution toward the optimum. As a result, the method achieves improved solution accuracy with a modest and acceptable increase in computational cost. Convergence of the proposed method is established from the perspective of the energy-based method. Validation on the 118-bus test system demonstrates the effectiveness of the PIDDPM.

REFERENCES

[1] W. Huang and *et. al.*, "Unsupervised learning for solving ac optimal power flows: Design, analysis, and experiment," *IEEE Trans. Power Syst.*, vol. 39, no. 6, pp. 7102–7114, 2024.

[2] X. Pan and *et. al.*, "Deepopf: A feasibility-optimized deep neural network approach for ac optimal power flow problems," *IEEE Syst. J.*, vol. 17, no. 1, pp. 673–683, 2023.

[3] W. Huang and *et. al.*, "Deepopf-v: Solving ac-opf problems efficiently," *IEEE Trans. Power Syst.*, vol. 37, no. 1, pp. 800–803, 2022.

[4] K. Chen and *et. al.*, "Physics-informed gradient estimation for accelerating deep learning-based ac-opf," *IEEE Trans. Ind. Inform.*, vol. 21, no. 6, pp. 4649–4660, 2025.

[5] J. Ho and *et. al.*, "Denoising diffusion probabilistic models," *Adv. Neural Inform. Process. Syst.*, vol. 33, pp. 6840–6851, 2020.

[6] J.-H. Bastek, W. Sun, and D. Kochmann, "Physics-informed diffusion models," in *The Thirteenth Int. Conf. Learn. Represent.*, 2025.

[7] B. Jiang, "The paper appendix," https://github.com/BozhenJIANG/PIDDPM-for-ACOPF, 2026, accessed: 2026-4-5.

[8] C. Coffrin, R. Bent, K. Sundar, Y. Ng, and M. Lubin, "Powermodels.jl: An open-source framework for exploring power flow formulations," in *2018 Power Systems Computation Conference*, June 2018, pp. 1–8.